					Tolerance class:

Pos.	Name	Technical info	pcs
1	Body	PE, ID1280	1
2	Cover insulated, lockable	PE; D800	1
3	Console	DN20; 190mm	1
4	Ball valve	DN20, brass	2
5	Service well	PE, D800	1
6	Pipe	PE, d32, PN10	2
7	Ladder	AISI316	1
8	Ball valve for drain	DN20, brass	1
9	Check valve	DN20	1
10	Telescopic handrail	AISI316	1

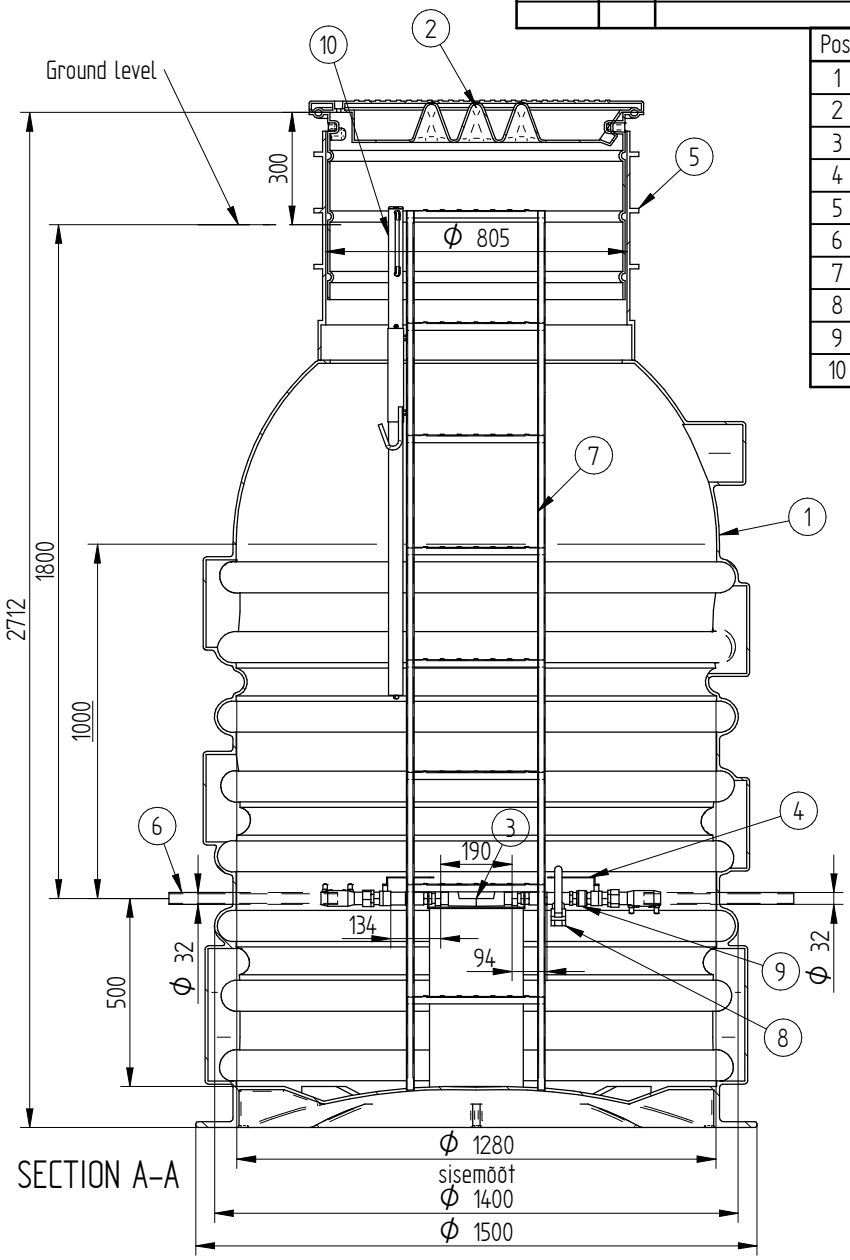

SECTION A-A

The water meter is installed by the Customer.!

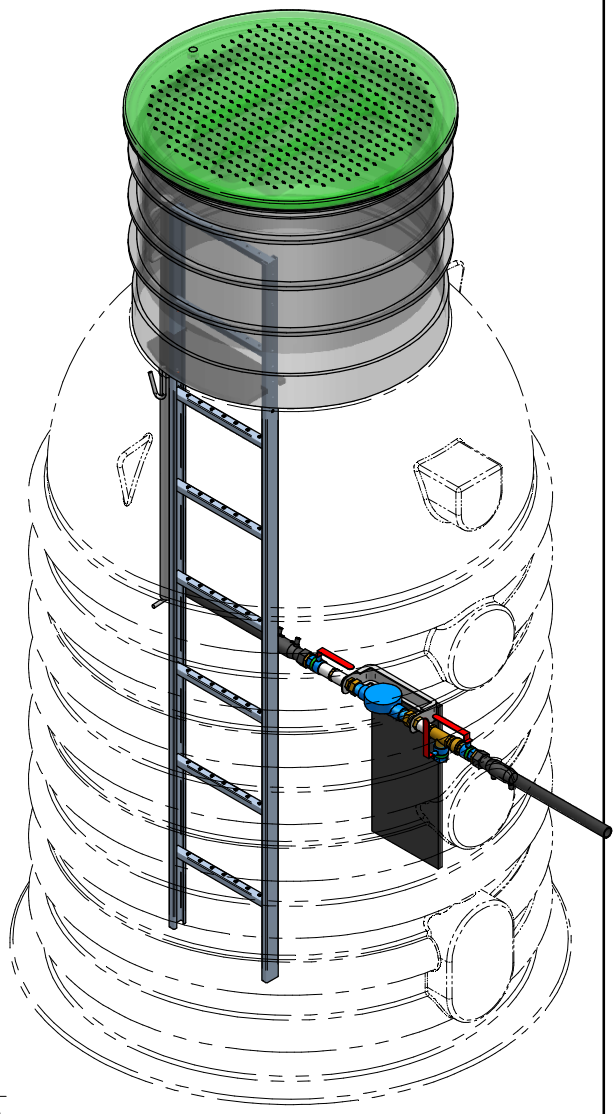

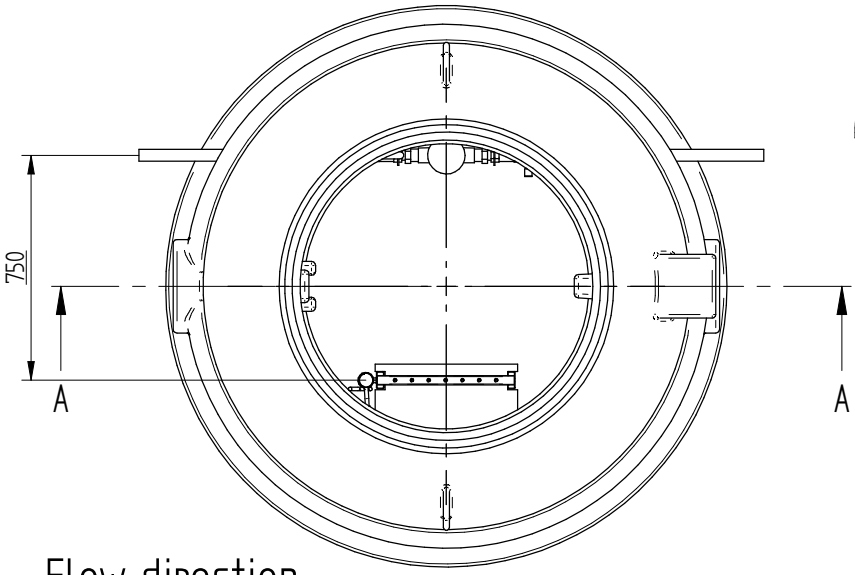

Flow direction

09.04.2025	MV			Flowmeter well d1550 DN20		
Date	Engin.	Signature	Sheets	Name		
eccua				Mass	Number	Rv 1

All rights reserved.